LOGO PRO 2

TRIM MODELS : LOGP2 - R/S - T - IC/CP/AT - REMOTE

IMPORTANT - READ CAREFULLY BEFORE INSTALLING FIXTURE. RETAIN THESE INSTRUCTIONS FOR FUTURE REFERENCE.
THIS PRODUCT MUST BE INSTALLED IN ACCORDANCE WITH THE NATIONAL ELECTRICAL CODE AND ALL APPLICABLE LOCAL CODES, BY A PERSON FAMILIAR WITH THE CONSTRUCTION AND OPERATION OF THE PRODUCT, AND THE HAZARDS INVOLVED. PROPER GROUNDING IS REQUIRED FOR SAFETY.

INSULATED CEILING OR AIRTIGHT INSTALLATION (IC / CP / AT* - REMOTE)

* Airtight box option (**AT**) will be available soon

A- REMOVE (**4**) PHILLIPS SCREWS IN ORDER TO OPEN HOUSING.
B- FOR INSULATED CEILING (**IC**) INSTALLATION: INSTALL BX CABLE (**NOT INCLUDED**) USING BX CONNECTOR (**INCLUDED**).
FOR CHICAGO PLENUM (**CP**) INSTALLATION: REMOVE THE KNOCKOUT, INSTALL A CONDUIT AND A CONDUIT CONNECTOR (**NOT INCLUDED**).
FOR AIRTIGHT (**AT**) INSTALLATION: REMOVE THE KNOCKOUT, INSTALL AN AIRTIGHT CONDUIT AND A CONDUIT CONNECTOR (**NOT INCLUDED**).
C- CLOSE THE HOUSING BY SCREWING THE PREVIOUSLY REMOVED (**4**) PHILLIPS SCREWS (**A**). LEAVE AT LEAST **6"** OF FEEDER CABLE ACCESSIBLE FROM UNDER THE CEILING.
D- ENGAGE (**4**) HANGER BARS IN HOUSING SLOTS AVAILABLE AND CONNECT THEM TOGETHER.

A + B

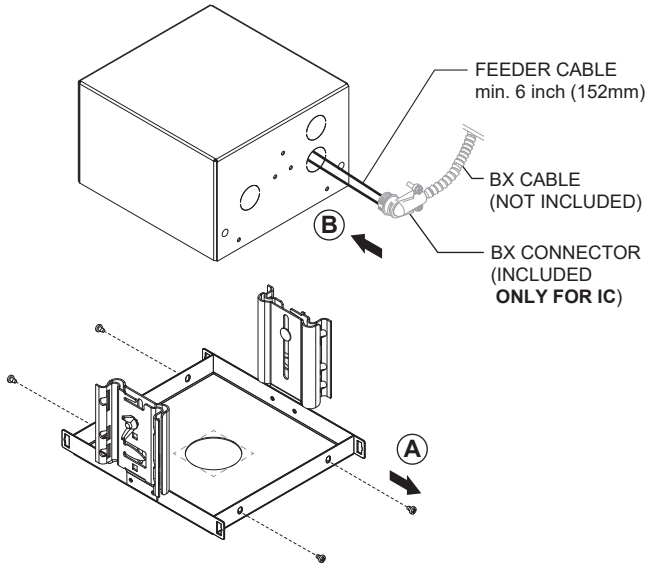

C

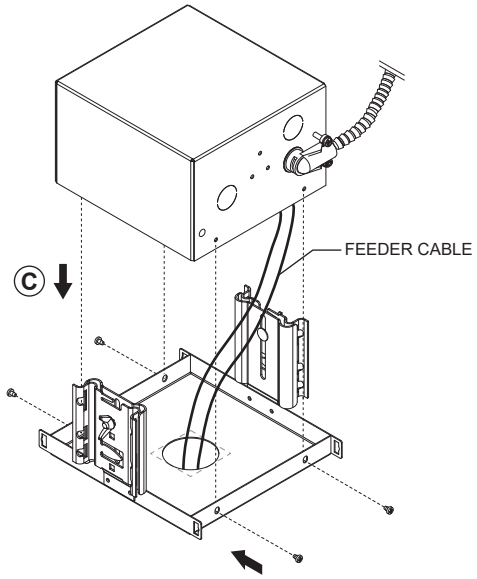

D

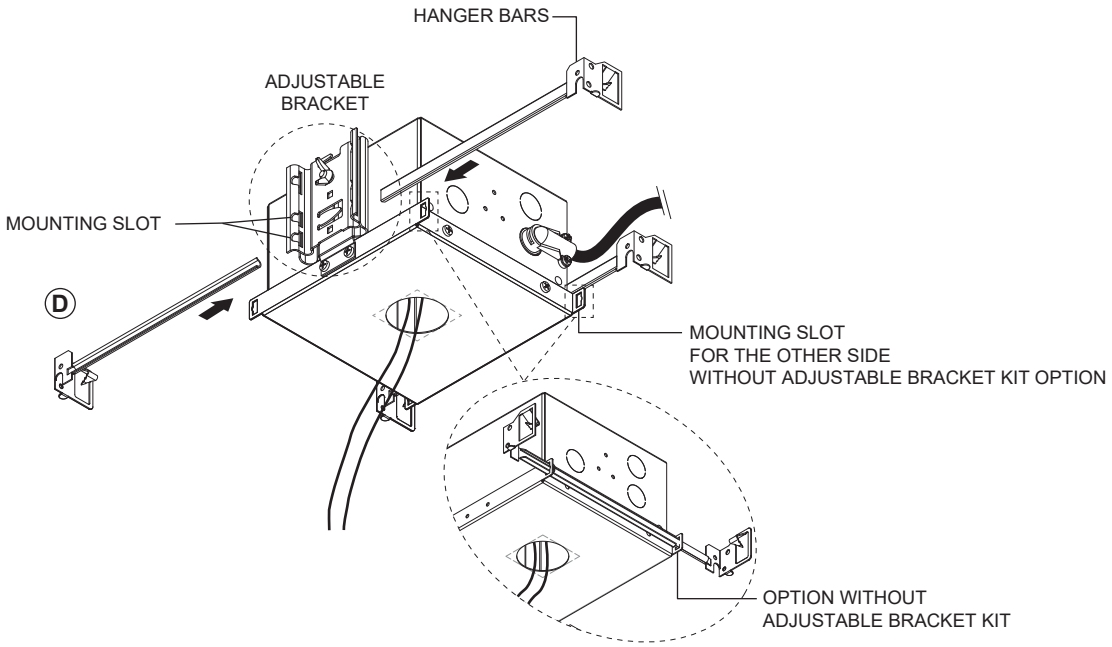

SISTEMALUX
9320 Boul. St-Laurent, suite 100, Montréal (Québec) Canada H2N 1N7
P.: 514.523.1339 F.: 514.525.6107 www.sistemalux.com

E- FASTEN HANGER BARS TO CEILING BRACE WITH #8 SCREWS (**NOT INCLUDED**). USE THE SMALL FOLDED TAB AT THE END OF THE BARS TO ALIGN WITH THE CEILING JOISTS. HANGER BARS ARE ALSO SUITABLE FOR GRID CEILING.

F- INSTALL THE DRYWALL AND MAKE THE CUT-OUT OPENING (**SEE DIMENSIONS BELOW**).

E

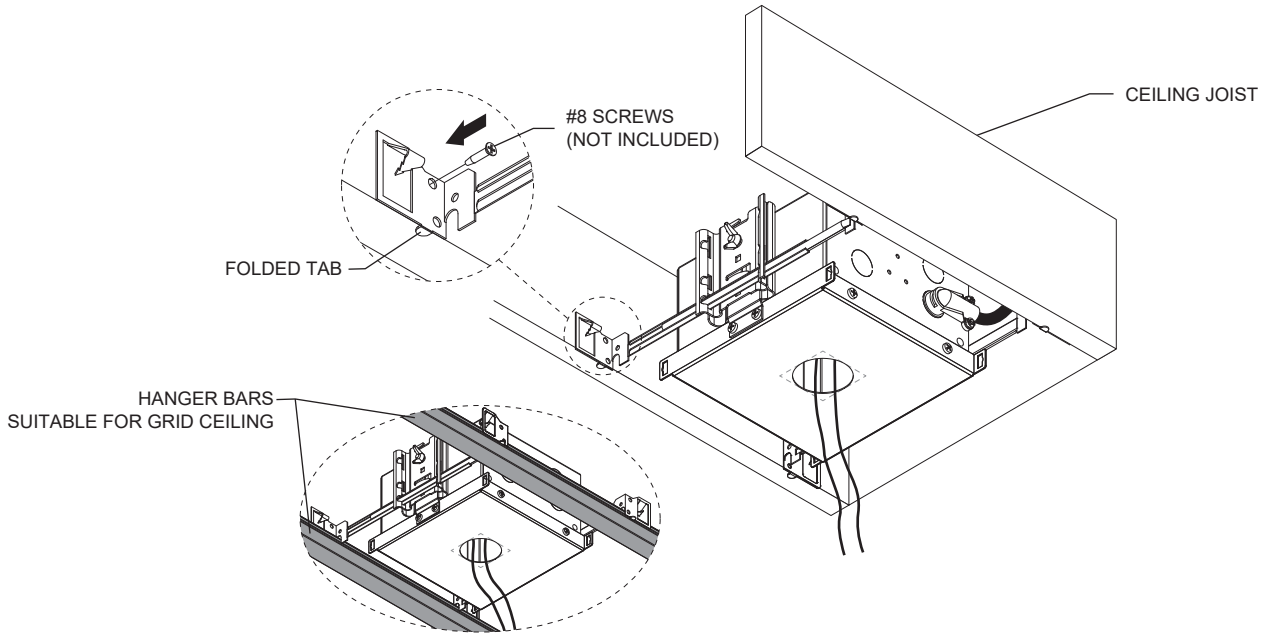

F

Model	Housing	Housing	Cut-out dimensions (A)	Ceiling thickness	Clearance (H)
LOGO PRO 2	TRIM	BI-LOGP2RT-IC-REM	Ø 1⅞" (Ø 47mm)	⅛" - ¾" (3 - 19mm)	4" (102mm)
		BI-LOGP2RT-CP-REM			
		BI-LOGP2RT-AT-REM*			
		BI-LOGP2ST-IC-REM	1 13/14" x 1 13/14" (46 x 46mm)		
		BI-LOGP2ST-CP-REM			
		BI-LOGP2ST-AT-REM*			

* Airtight box option (**AT**) will be available soon

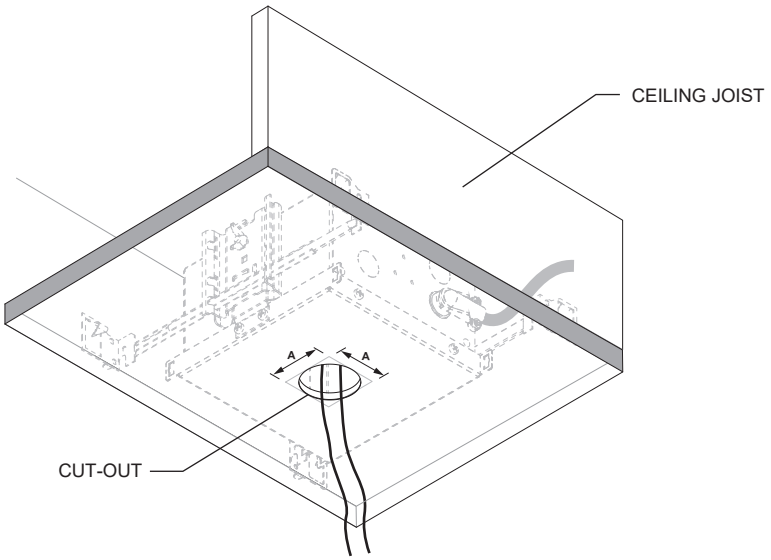

SISTEMALUX

9320 Boul. St-Laurent, suite 100, Montréal (Québec) Canada H2N 1N7
P.: 514.523.1339 F.: 514.525.6107 www.sistemalux.com

G- REMOVE BAFFLE FROM THE LIGHTING FIXTURE.

H- MAKE ALL NECESSARY CONNECTIONS USING THE QUICK CONNECTORS (**INCLUDED**). USE ONLY WITH **CLASS 2** POWER SUPPLY.

I- ***ROUND MODEL****:* BEND AND HOLD SPRINGS AGAINST FIXTURE BODY AND ROTATE IN SPECIFIED DIRECTION (SEE BELOW) WHILE PUSHING UPWARD TO INSERT THE FIXTURE INTO THE CUT-OUT OF CEILING.

SQUARE MODEL*:* ADJUST THE CLIP GAP DEPENDING ON THE CEILING THICKNESS. INSERT FIXTURE INTO THE CUT-OUT OF CEILING UNTIL IT CLICKS IN PLACE TO BE SECURED.

J- (*Optional*) INSERT HONEYCOMB ACESSORY IF APPICABLE.

G

ROUND MODEL

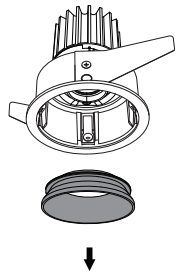

SQUARE MODEL

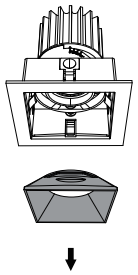

H

FEED BY CLASS 2 POWER SUPPLY

ROUND MODEL

SQUARE MODEL

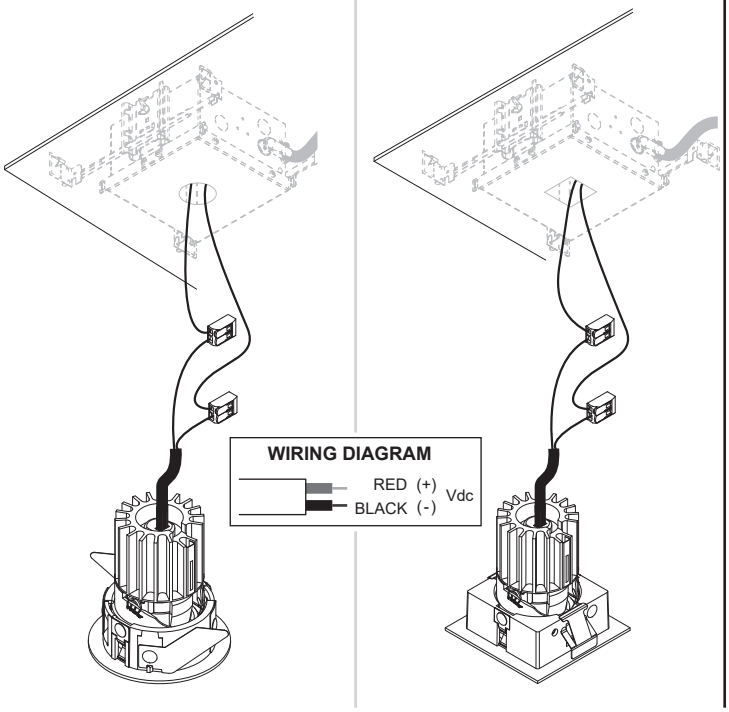

I

ROUND MODEL

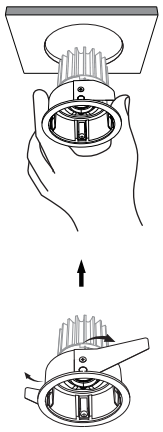

SQUARE MODEL

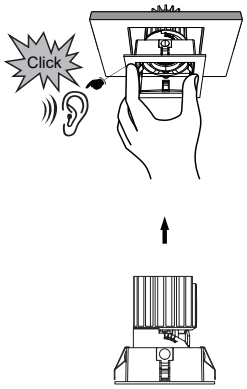

J

ROUND MODEL

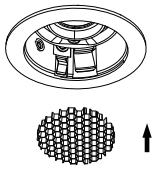

SQUARE MODEL

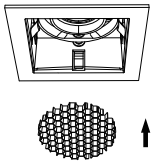

(Optional honeycomb accessory Please order separately)

SISTEMALUX

9320 Boul. St-Laurent, suite 100, Montréal (Québec) Canada H2N 1N7

P.: 514.523.1339 F.: 514.525.6107 www.sistemalux.com

FOR FIXED ORIENTATION

K- ALIGN THE BAFFLE AND PUSH IT INTO THE TRIM UNTIL IT CLICKS IN PLACE.

K

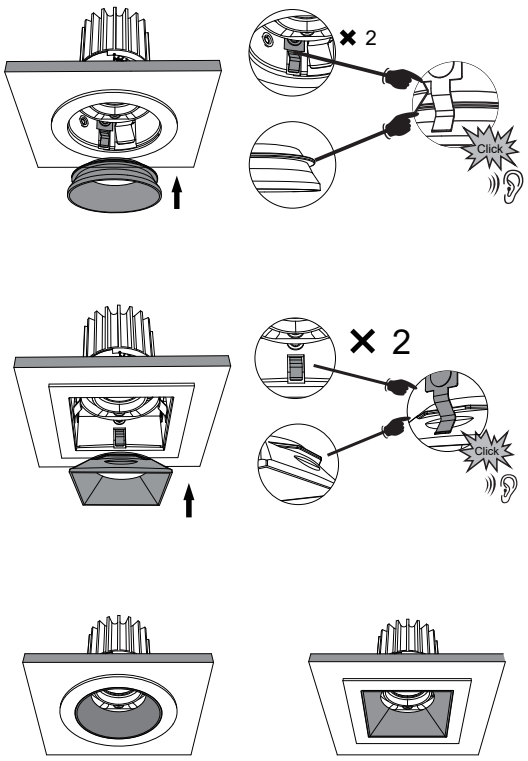

FOR ADJUSTABLE ORIENTATION

K- THE OPTICAL ORIENTATION CAN CHANGE FOR 30° TILT AND 355° PAN WITH MANUAL ADJUSTEMENT.

L- ALIGN THE BAFFLE AND PUSH IT INTO THE TRIM UNTIL IT CLICKS IN PLACE.

K

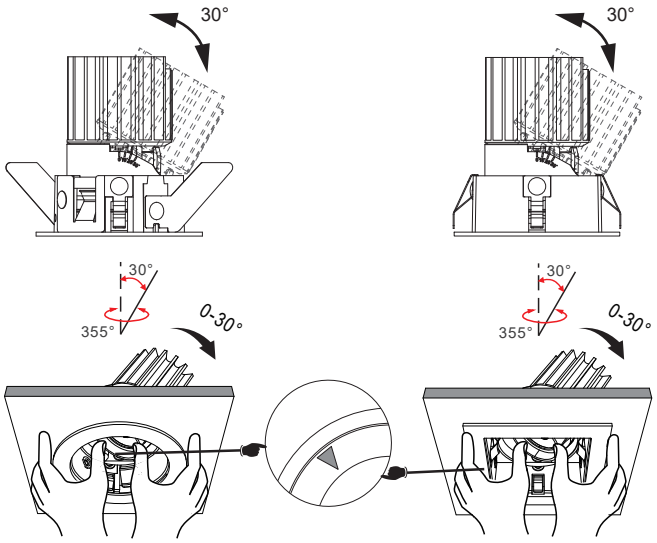

L

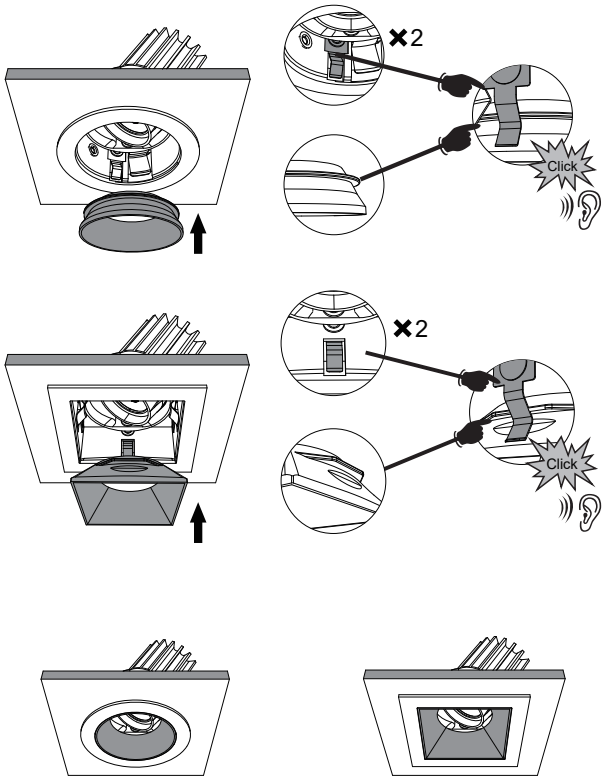

SISTEMALUX

9320 Boul. St-Laurent, suite 100, Montréal (Québec) Canada H2N 1N7
P.: 514.523.1339 F.: 514.525.6107 www.sistemalux.com