IMPORTANT - READ CAREFULLY BEFORE INSTALLING FIXTURE. RETAIN THESE INSTRUCTIONS FOR FUTURE REFERENCE.
THIS PRODUCT MUST BE INSTALLED IN ACCORDANCE WITH THE NATIONAL ELECTRICAL CODE AND ALL APPLICABLE LOCAL CODES, BY A PERSON FAMILIAR WITH THE CONSTRUCTION AND OPERATION OF THE PRODUCT, AND THE HAZARDS INVOLVED. PROPER GROUNDING IS REQUIRED FOR SAFETY.

INSULATED CEILING OR AIRTIGHT INSTALLATION (IC / CP / AT* - REMOTE)

PAGE 1-2

* Airtight box option (**AT**) will be available soon

A. REMOVE (**4**) PHILLIPS SCREWS IN ORDER TO OPEN HOUSING.
FOR INSULATED CEILING (**IC**) INSTALLATION: INSTALL BX CABLE (**NOT INCLUDED**) USING BX CONNECTOR (**INCLUDED**).

B. FOR CHICAGO PLENUM (**CP**) INSTALLATION: REMOVE THE KNOCKOUT, INSTALL A CONDUIT AND A CONDUIT CONNECTOR (**NOT INCLUDED**).
FOR AIRTIGHT (**AT**) INSTALLATION: REMOVE THE KNOCKOUT, INSTALL AN AIRTIGHT CONDUIT AND A CONDUIT CONNECTOR (**NOT INCLUDED**).

C. CLOSE THE HOUSING BY SCREWING THE (**4**) PHILLIPS SCREWS PREVIOUSLY REMOVED (**A**).
LEAVE AT LEAST 6" (**152mm**) OF FEEDER CABLE ACCESSIBLE FROM UNDER THE CEILING.

D. ENGAGE (**4**) HANGER BARS IN HOUSING SLOTS AVAILABLE AND CONNECT THEM TOGETHER.

A + B

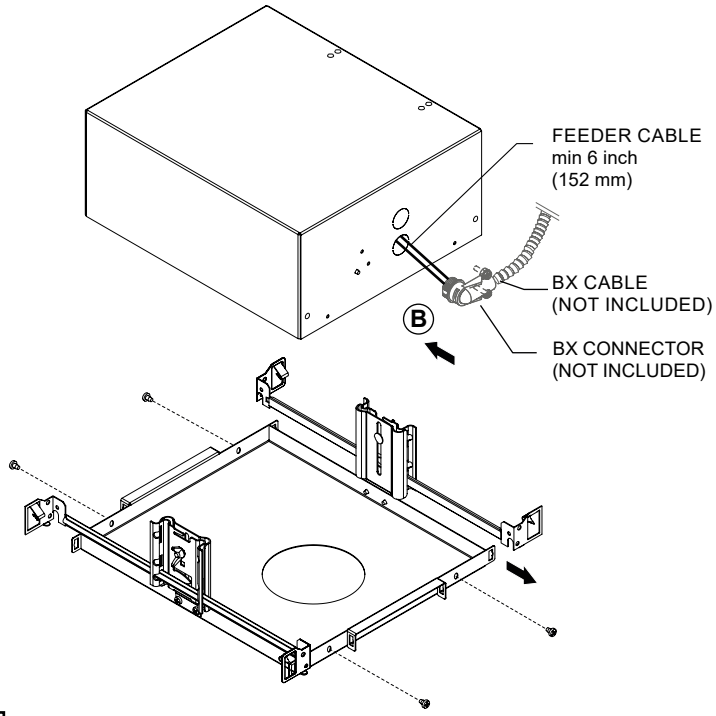

C

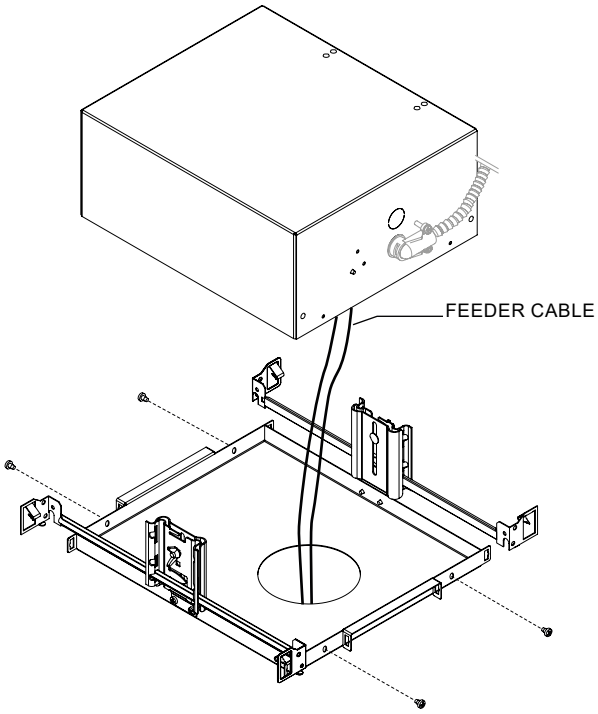

D

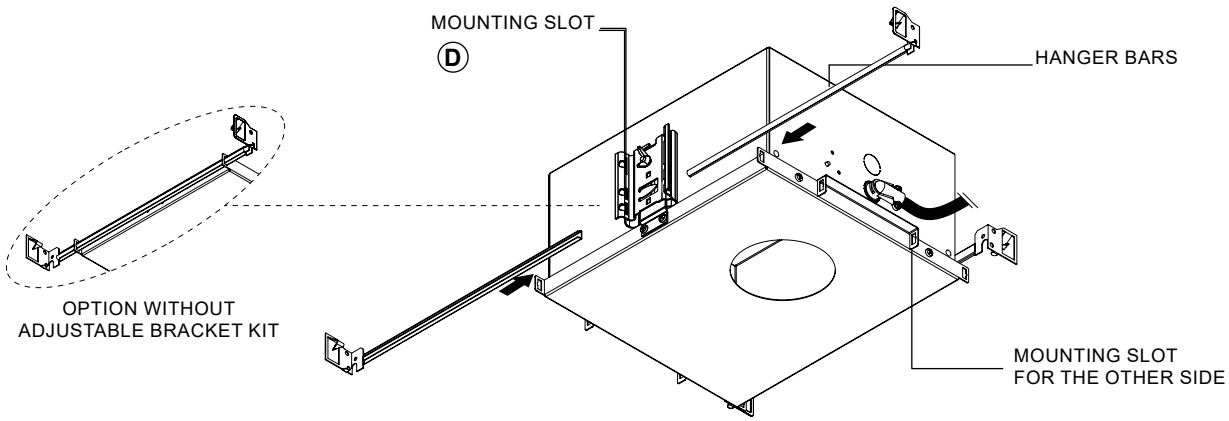

E. FASTEN HANGER BARS TO CEILING BRACE WITH #8 SCREWS (NOT INCLUDED). USE THE SMALL FOLDED TAB AT THE END OF THE BARS TO ALIGN WITH THE CEILING JOISTS. HANGER BARS ARE ALSO SUITABLE FOR GRID CEILING.

F. INSTALL THE DRYWALL AND MAKE THE CUT-OUT OPENING (SEE DIMENSIONS BELOW).

G. USE ONLY WITH CLASS 2 POWER SUPPLY

E

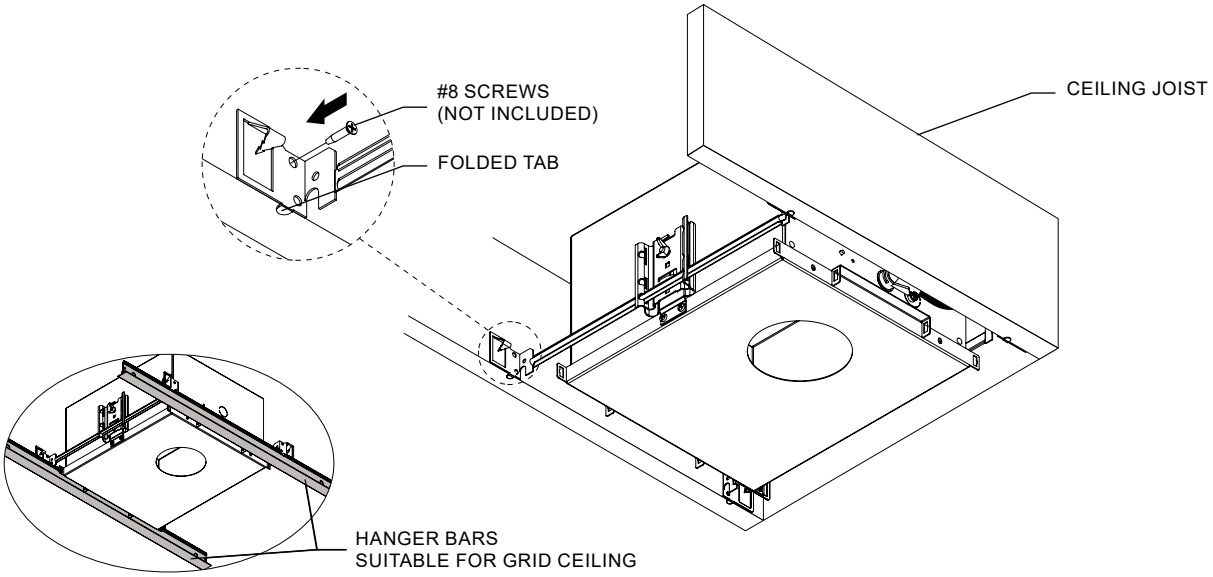

F

Model	Shape	Mounting	Housing	Cut-out Dimenions (A)	Ceiling Thickness	Clearance (H)
LOGP4R	Round	Trim	BI-LOGP4RT-IC/CP/AT*-REM	Ø4" (Ø100mm)	1/16" - 15/16" (1-24mm)	6½" (165mm)
		Trimless Mud	BI-LOGP4RL-IC/CP/AT*-REM	Ø4⅛" (Ø105mm)	1/16" - 15/16" (1-24mm)	
		Trimless Millwork	BI-LOGP4RM-IC/CP/AT*-REM		½" - 15/16" (12.5-24mm)	
LOGP4S	Square	Trim	BI-LOGP4ST-IC/CP/AT*-REM	□3 13/16" (□97mm)	1/16" - 15/16" (1-24mm)	
		Trimless Mud	BI-LOGP4SL-IC/CP/AT*-REM	□3⅞" (□99mm)	1/16" - 15/16" (1-24mm)	
		Trimless Millwork	BI-LOGP4SM-IC/CP/AT*-REM	□3 13/16" (□97mm)	½" - 15/16" (12.5-24mm)	

* Airtight box option (**AT**) will be available soon

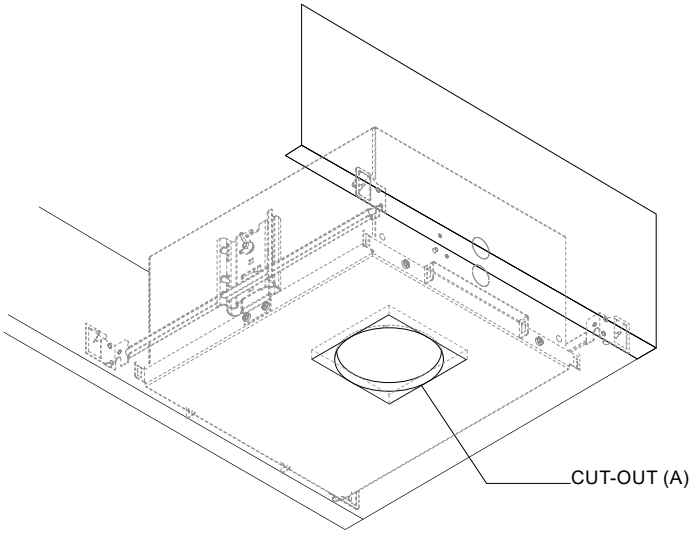

TRIMLESS KIT INSTALLATION *(Before Fixture Installation if applicable)* PAGE 3

ROUND TRIMLESS MUD

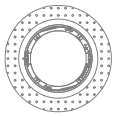

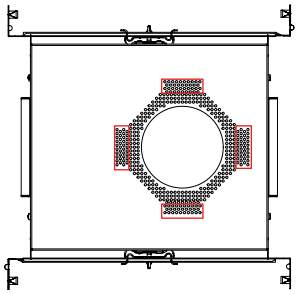

ROUND TRIMLESS MILLWORK

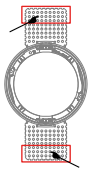

- CHECK THE DIRECTION
- CHECK BOTH SIDES FOR SCREW FIX

SQUARE TRIMLESS MUD

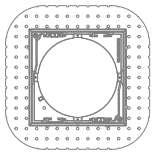

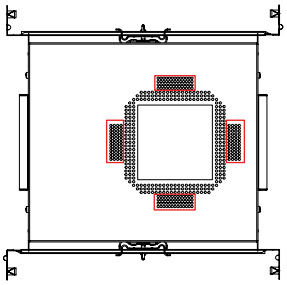

SQUARE TRIMLESS MILLWORK

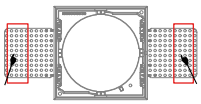

- CHECK THE DIRECTION
- CHECK BOTH SIDES FOR SCREW FIX

⚠ ***IMPORTANT: INSTALL TRIMLESS KIT IN THE CORRECT ORIENTATION TO ALLOW THE DRIVER TO PASS THROUGH AND FIT INSIDE THE INSULATION BOX.***

ROUND / SQUARE TRIMLESS MUD:

A. CHOOSE THE BRACKET DIRECTION (VERTICAL OR HORIZONTAL) DEPENDING ON THE CEILING THICKNESS.

B. INSERT THE TRIMLESS KIT INTO THE CEILING. TO HOLD THE KIT IN THE CEILING, ADJUST THE (**2X**) FIXATION BRACKET ADJUSTMENT SCREWS WITH A DRILL (**RECOMMENDED**).
* THE BRACKETS WILL OPEN AUTOMATICALLY WHILE SCREWING.
** FOR BETTER FIXATION (**IF NEEDED**), SECURE THE TRIMLESS KIT TO THE CEILING USING (**2X**) #6 SCREWS (**NOT INCLUDED**)

C. FINISH THE ASSEMBLY BY PLASTERING, SANDING AND PAINTING.

ROUND / SQUARE TRIMLESS MILLWORK:

A. ADJUST BRACKET POSITION DEPENDING ON THE CEILING THICKNESS.

B. POSITION THE TRIMLESS KIT IN THE CEILING

C. SECURE THE TRIMLESS KIT TO THE CEILING USING (**2X**) #6 SCREWS (**NOT INCLUDED**).

D. FINISH THE ASSEMBLY BY PLASTERING, SANDING AND PAINTING.

ROUND TRIMLESS MUD

Ⓐ

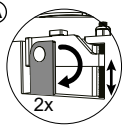

VERTICAL FOR CEILING THICKNESS 1/16" - 7/16" (1 - 11.5mm)

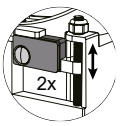

HORIZONTAL FOR CEILING THICKNESS 7/16" - 15/16" (11.5 - 24mm)

Ⓑ

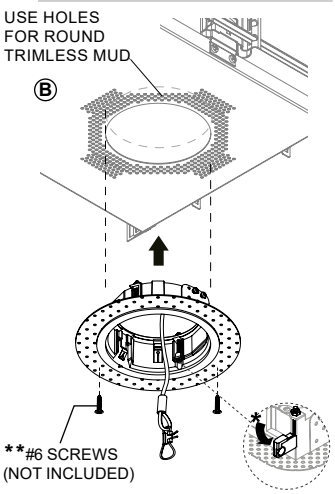

Ⓒ

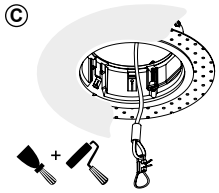

SQUARE TRIMLESS MUD

Ⓐ

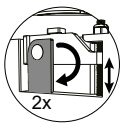

VERTICAL FOR CEILING THICKNESS 1/16" - 7/16" (1 - 11.5mm)

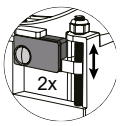

HORIZONTAL FOR CEILING THICKNESS 7/16" - 15/16" (11.5 - 24mm)

Ⓑ

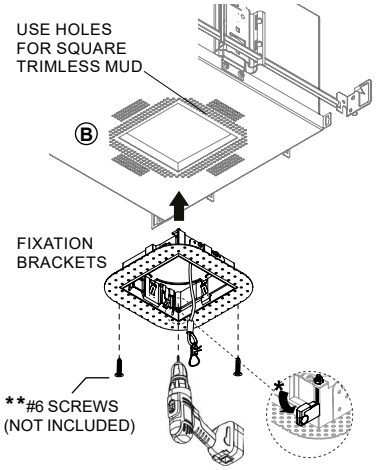

Ⓒ

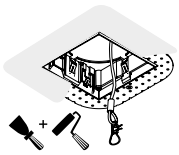

ROUND TRIMLESS MILLWORK

Ⓐ

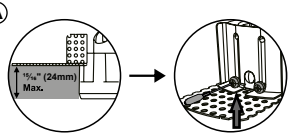

CEILING THICKNESS 1/2" - 15/16" (12.5 - 24mm)

Ⓑ PLACE THE TRIMLESS KIT INSIDE THE INSULATION BOX

USE ONE OF TWO DIRECTIONS FOR ROUND TRIMLESS MILLWORK

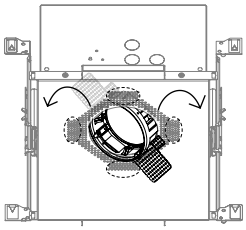

Ⓒ

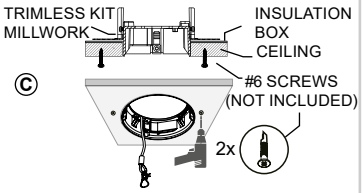

Ⓓ

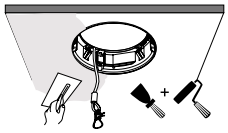

SQUARE TRIMLESS MILLWORK

Ⓐ

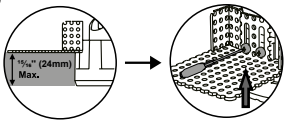

CEILING THICKNESS 1/2" - 15/16" (12.5 - 24mm)

Ⓑ PLACE THE TRIMLESS KIT INSIDE THE INSULATION BOX

USE ONE OF TWO DIRECTIONS FOR SQUARE TRIMLESS MILLWORK

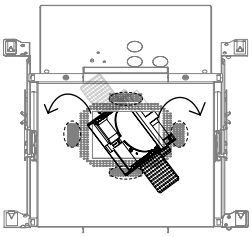

Ⓒ

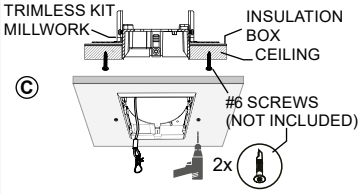

Ⓓ

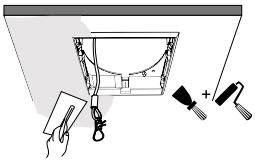

FIXTURE INSTALLATION

PAGE 4-6

A. MAKE ALL NECESSARY CONNECTIONS USING THE QUICK CONNECTORS (**INCLUDED**).
B. SEE THE DETAIL ON PAGE 5 FOR EACH CONFIGURATION.

A + B

FEED BY CLASS 2 POWER SUPPLY

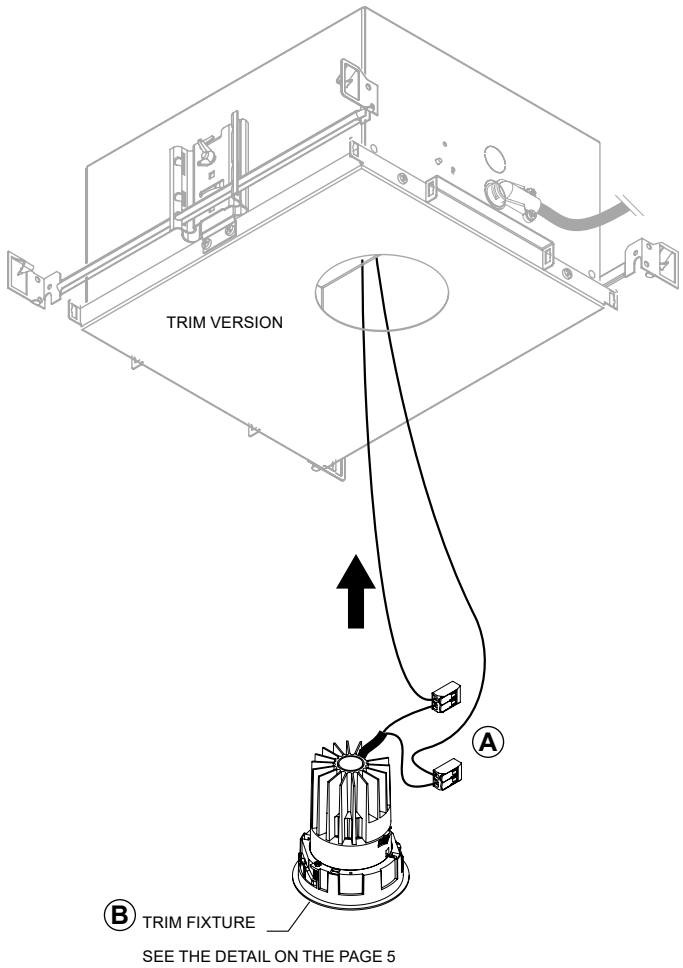

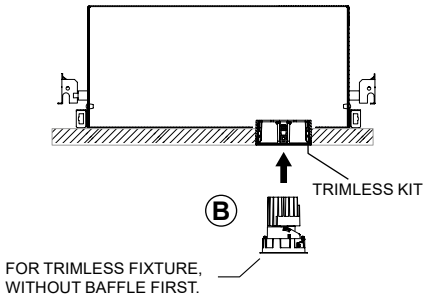

WIRING DIAGRAM

TRIM VERSION (ROUND / SQUARE)

* FOLLOWING STEPS **A** TO **B** FROM PREVIOUS PAGE

C. CHOOSE THE BRACKET DIRECTION (**VERTICAL OR HORIZONTAL**) DEPENDING ON THE CEILING THICKNESS. INSERT THE TRIM KIT INTO THE CEILING. TO HOLD THE KIT IN THE CEILING, ADJUST THE (**2X**) FIXATION BRACKET ADJUSTMENT SCREWS WITH A DRILL (**RECOMMENDED**).
* THE BRACKETS WILL OPEN AUTOMATICALLY WHILE SCREWING.

C

ROUND MODEL

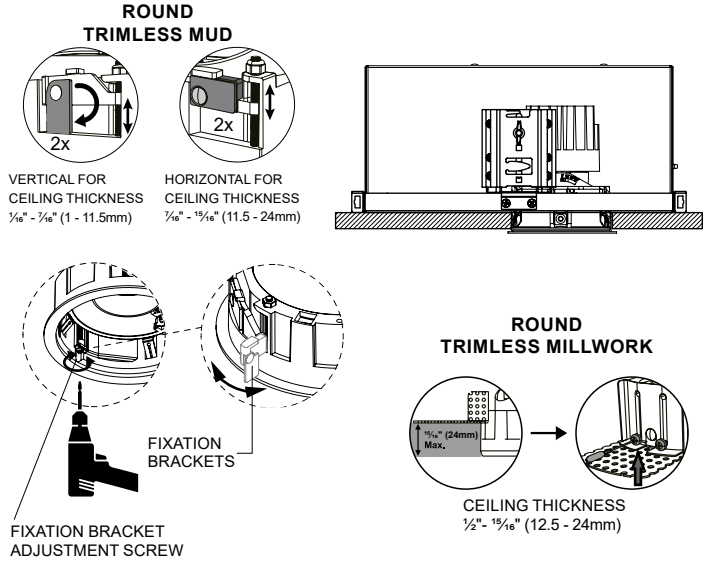

* FOLLOWING STEPS **A** TO **B** FROM PREVIOUS PAGE

C. CHOOSE THE BRACKET DIRECTION (**VERTICAL OR HORIZONTAL**) DEPENDING ON THE CEILING THICKNESS. INSERT THE TRIM KIT INTO THE CEILING. TO HOLD THE KIT IN THE CEILING, ADJUST THE (**2X**) FIXATION BRACKET ADJUSTMENT SCREWS WITH A DRILL (**RECOMMENDED**).
* THE BRACKETS WILL OPEN AUTOMATICALLY WHILE SCREWING.

C

SQUARE MODEL

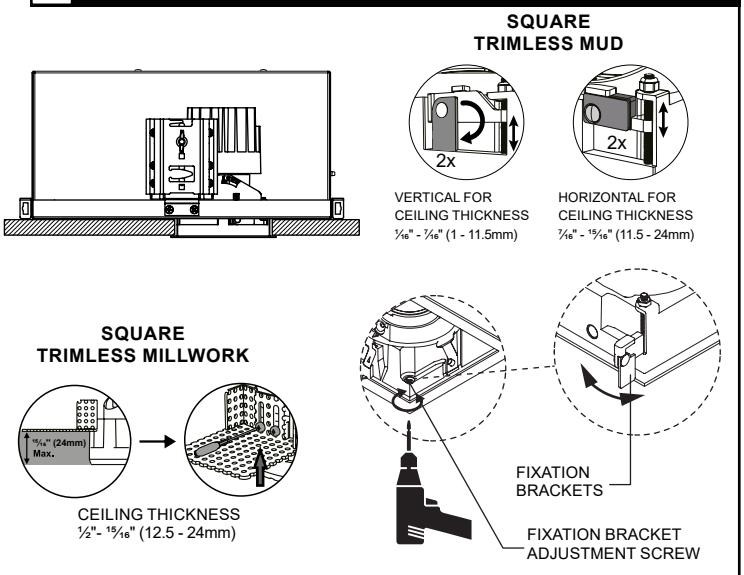

TRIMLESS VERSION (ROUND / SQUARE – THE INSTALLATION DETAIL ON PAGE 3)

* ENSURE THE TRIMLESS KIT IS PROPERLY INSTALLED (SEE PAGE 3)
* FOLLOWING STEPS **A** TO **B** FROM PREVIOUS PAGE

D. INSERT LIGHTING MODULE INTO THE FRAME KIT UNTIL IT CLICKS IN PLACE.

D

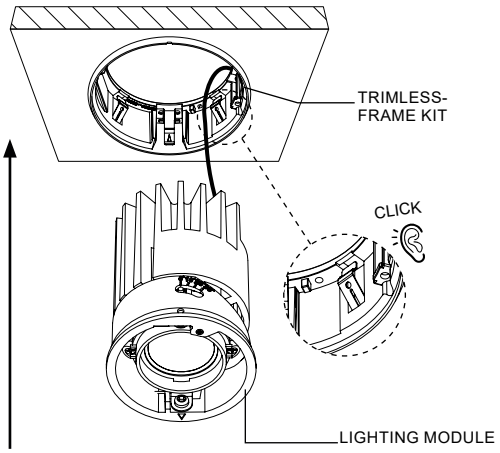

OPTICAL ADJUSTMENT AND FINAL ASSEMBLY

E. THE OPTICAL ORIENTATION CAN BE MANUALLY ADJUSTED UP TO 30°(**IF NECESSARY**).
F. INSERT THE BAFFLE INTO THE TRIM UNTIL IT CLICKS SECURELY INTO PLACE.

E

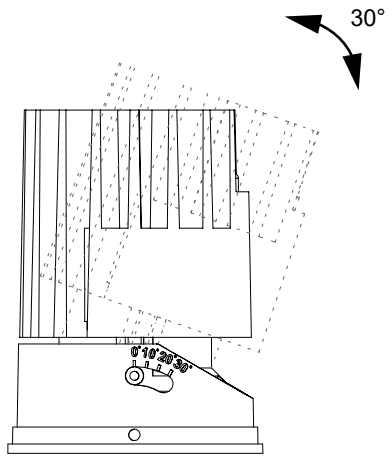
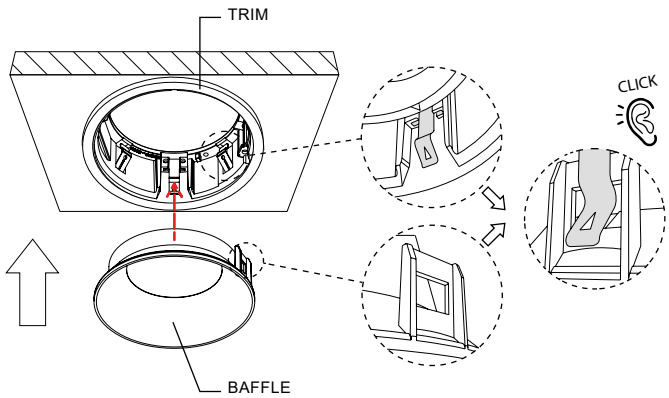
F