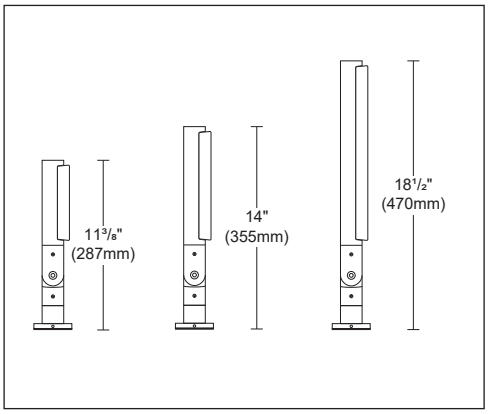

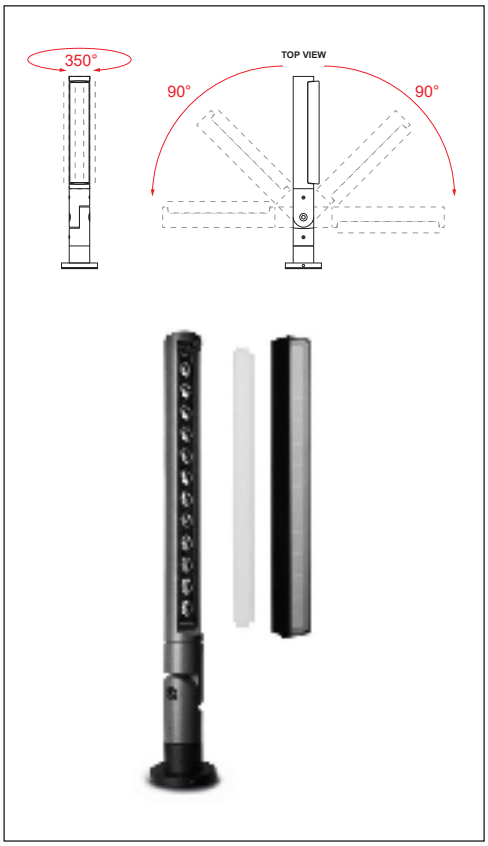

Luminaire characteristics

SIZE	TOTAL INPUT	OPTIC	LUMEN (lm)*	EFFICACY (lm/W)*	MAX CANDELA (cd)*
SMALL	14W	Spot 10°	573	41	10 261
		Flood 32°	470	34	1 453
		Wide flood 60°	363	26	495
		Elliptical 60° x 10°	430	31	2 379
MEDIUM	24.5W	Spot 10°	940	38	17 094
		Flood 32°	799	33	2 608
		Wide flood 60°	596	24	820
		Elliptical 60° x 10°	692	28	3 997
LARGE	34W	Spot 10°	1705	51	42 206
		Flood 32°	1418	42	4 730
		Wide flood 60°	1023	30	1 450
		Elliptical 60° x 10°	1218	38	7 633

*For 3000K, 90CRI

Source:
White LED
2700K: 90CRI,
3000K: 90CRI,
4000K: 80CRI.

Lumen maintenance:
80% of initial lumens at 70 000 hours (L80 B10)
T77°F (25°C)
80% of initial lumens at 50 000 hours (L80 B10)
T104°F (40°C) (LM-80)

Optics:
Spot, flood, wide flood and elliptical. Optics are achieve with filters already install in fixture. See effect on page 2 and codes for extra filters. Optical filter are easily interchangeable and can be ordered separately.

Material:
Body: die-cast aluminum
Diffuser: 1/16" (2mm) clear toughened glass
Hardware: stainless steel screws

Mounting:
Surface mounted. Optional canopy for standard octagonal junction box installation.
Soil. Optional stake to be ordered separately.
Pole mounted. Optional flange to be ordered separately
Supplied with 5m of CMP outdoor suitable 2/22AWG cable.

Electrical:
High efficiency dimmable remote LED driver, rated at 50 000 hours. 120V/277V. See remote power supply options on page 3.

Dimming:
Leading (Triac) and trailing edge(ELV), down to 15% and 0-10V down to 0.1% (120-277V). See dimming options on page 3.

Temperature of operation:
-4°F to 122°F (-20°C to 50°C)

Finish:
Standard finish
24

Premium finishes
01 07 09 14 20

Anthracite gray painted finish. Double powder paint coat in 3 steps process: surface treatment containing ceramic nano particles (Bonderite). Epoxy primer paint. Polyester powder paint with high resistance against UV rays and harsh weather conditions. See page 2 for other premium finishes available (white, green, black, gray & burnish bronze)

Weight:
Small: 2.86lb (1.3kg)
Medium: 3.30lb (1.5kg)
Large: 3.99lb (1.81kg)

Warranty:
5 year limited warranty.

Ratings:
IP66, IK07

Certification:
cULus for wet location.

ORDERING INFO

CLICK HERE
CONFIGURE

-REM
PRODUCT CODE

MODEL	LED	OPTIC[1]	MOUNTING	VOLTAGE	FINISH
S1751 Small 4 LED **S1761** Medium 7 LED **S1771** Large 12 LED	**H** 2700K, 90CRI **W** 3000K, 90CRI **N** 4000K, 80CRI	**SP** Spot (10°) **FL** Flood (32°) **WF** Wide flood (60°) **ELL** Elliptical (60° x 10°)	**FW** Surface, pole or soil mounting, no junction box **JB** Surface mounting, with junction box	**REM** Remote	**24** Anthracite gray *PREMIUM* **01** White **07** Green **09** Black **14** Gray **20** Burnished bronze

1 Optics are achieve with filters already install in fixture. See effect below and codes for extra filters.

EXTRA OPTICAL FILTER (To be ordered seperately)

MODEL	SPOT 10˚	FLOOD 32˚	WIDE FLOOD 60˚	ELLIPTICAL 60˚ X 10˚
SMALL S1751	S1752	N/A	S1753	S1754
MEDIUM S1761	S1762	N/A	S1763	S1764
LARGE S1771	S1772	N/A	S1773	S1774

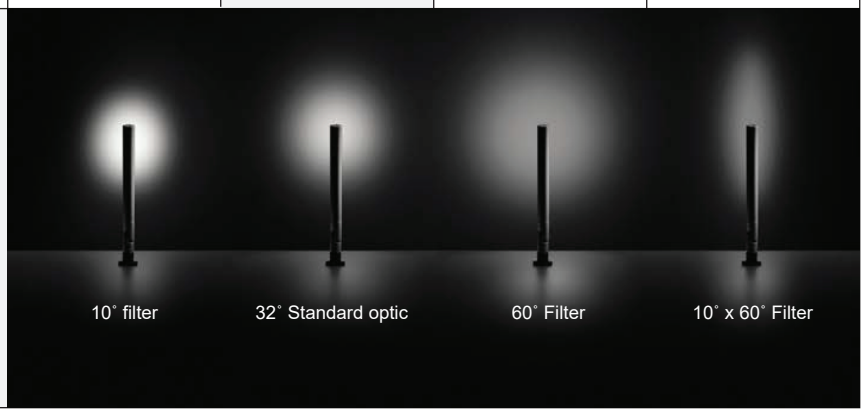

POLE MOUNTING

FLANGE FOR POLE INSTALLATION

Pole Ø: 2³/₈" (60mm) or 3" (76mm)

	Dimensions	Length	Weight
☐ **S1758**	Ø2.6" x 0.75" (Ø66mm x 19mm)	2³/₈" (60mm)	0.11lb (0.05kg)

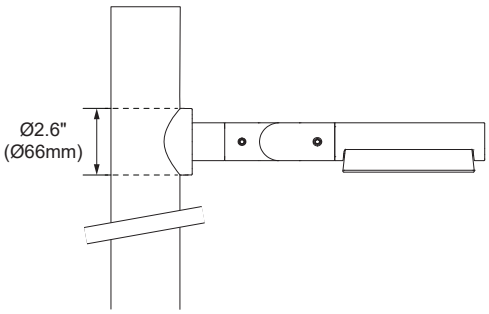

POLE INFORMATIONS

POLE Ø2³/₈" (Ø60mm)

☐ SUPPLIED BY OTHER
CONTACT FACTORY FOR POLE DETAILS

HEIGHT: _____ FT

MODEL: Straight

INSTALLATION: Anchor bolts

MATERIAL:
- ☐ Aluminum
- ☐ Galvanized steel

POLE Ø3" (Ø76mm)

☐ SUPPLIED BY OTHER
CONTACT FACTORY FOR POLE DETAILS

FINISH [1]:
- ■ 01 - White (RAL9016)
- ☐ 07 - Green (RAL6028)
- ☐ 09 - Black (RAL9005)
- ☐ 14 - Aluminium gray (RAL9006)
- ☐ 20 - Burnished bronze (RAL8019)
- ☐ 24 - Anthracite gray (RAL7022)
- ☐ Custom RAL _____

MODELS	EPA
SMALL 4 LED	0.030ft² (0,009 m²)
MEDIUM 7 LED	0.043ft² (0,016m²)
LARGE 12 LED	0.57ft² (0,021m²)

1 We provide RAL numbers that are similar, but we cannot guarantee an exact color match.
For a more accurate color and gloss match, please contact customer service for a sample chip.

STAKE IN POLYPROPYLENE

2" of the upper part stay out of the ground

	Dimensions	Length	Weight
☐ **S1768**	Ø2.6" x 11.8" (Ø66mm x 300mm)	11.8" (300mm)	0.11lb (0.05kg)

☐ **4543-00** Wet location junction box

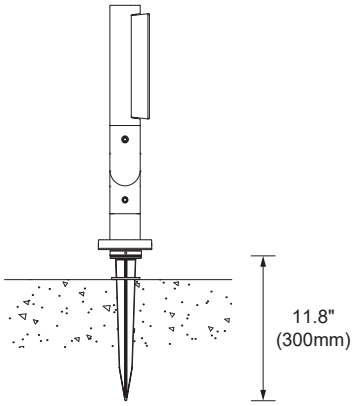

REMOTE LED DRIVER OPTIONS (TO BE ORDERED SEPARATELY)

-REM
PRODUCT CODE

Outdoor rated drivers

Driver box model	Min-max units		
	S1751 10.6W*	**S1761 18.3W***	**S1771 30.6W***
4548-0850-035-120-LTE	2	1	1
4549-0850-040-UNV-D10	1-3	1-2	1
4549-0850-046-UNV-ED10	1-3	1-2	1
4549-0850-050-UNV-SD10 2 LED outputs	1-4 (max 2 per output)	1-2 (1 per output)	1
4549-0850-100-UNV-SD10 4 LED outputs	1-9 (max 4 per output)	1-4 (max 1 per output)	1-3 (max 1 per output)

Indoor rated drivers

Driver box model	Min-max units		
	S1751 10.6W*	**S1761 18.3W***	**S1771 30.6W***
4445-0850-035-120-LTE	2	1	1
4450-0850-040-UNV-D10	1-3	1-2	1
4450-0850-046-UNV-ED10	1-3	1-2	1
4450-0850-050-UNV-SD10 2 LED outputs	1-4 (max 2 per output)	1-2 (1 per output)	1
4448-0850-100-UNV-SD10 4 LED outputs	1-9 (max 4 per output)	1-4 (max 1 per output)	1-3 (max 1 per output)

*Represent LED source wattage for one (1) fixture.

Driver code example

MODEL	CONSTANT VOLTAGE	WATTAGE	VOLTAGE	DIMMING PROTOCOL
4445 6" x 6" x 3" (152 x 152 x 76mm) **4448** 10" x 8" x 4" (254 x 203x 101mm) **4450** 8" x 8" x 4" (203 x 203x 101mm) **4548** 6" x 4.5" x 3" (152 x 114 x 76mm) **4549** 14.5" x 5" x 3.5" (368 x 127 x 89mm)	**0850** 850 mA	**035 to 100**	**120** 120V **UNV** 120-277V	**LTE** Leading edge and trailing edge (ELV and TRIAC) Max distance: 9m (30ft)[1] Down to 15%) **D10** 0-10V Max distance: 100m (330ft)[1] (down to 0.1%) **ED10** 0-10V ELDOLED ECOdrive Max distance: 36m (118ft)[1] (down to 1%) **SD10** 0-10V ELDOLED SOLOdrive Max distance: 36m (118ft)[1] (down to 0.1%)

[1] Max distance cable calculated for 16AWG cable at full load.
Contact customer service for longer remote distance.

WIRING DIAGRAMS
Fixture must be connected in series.

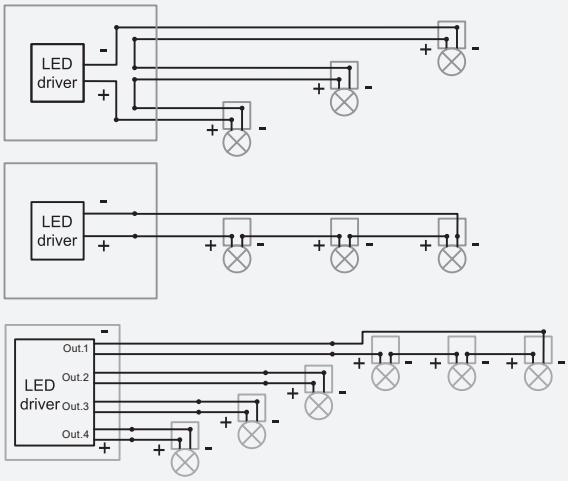

DIMENSIONS

Small S1751	Medium S1761	Large S1771

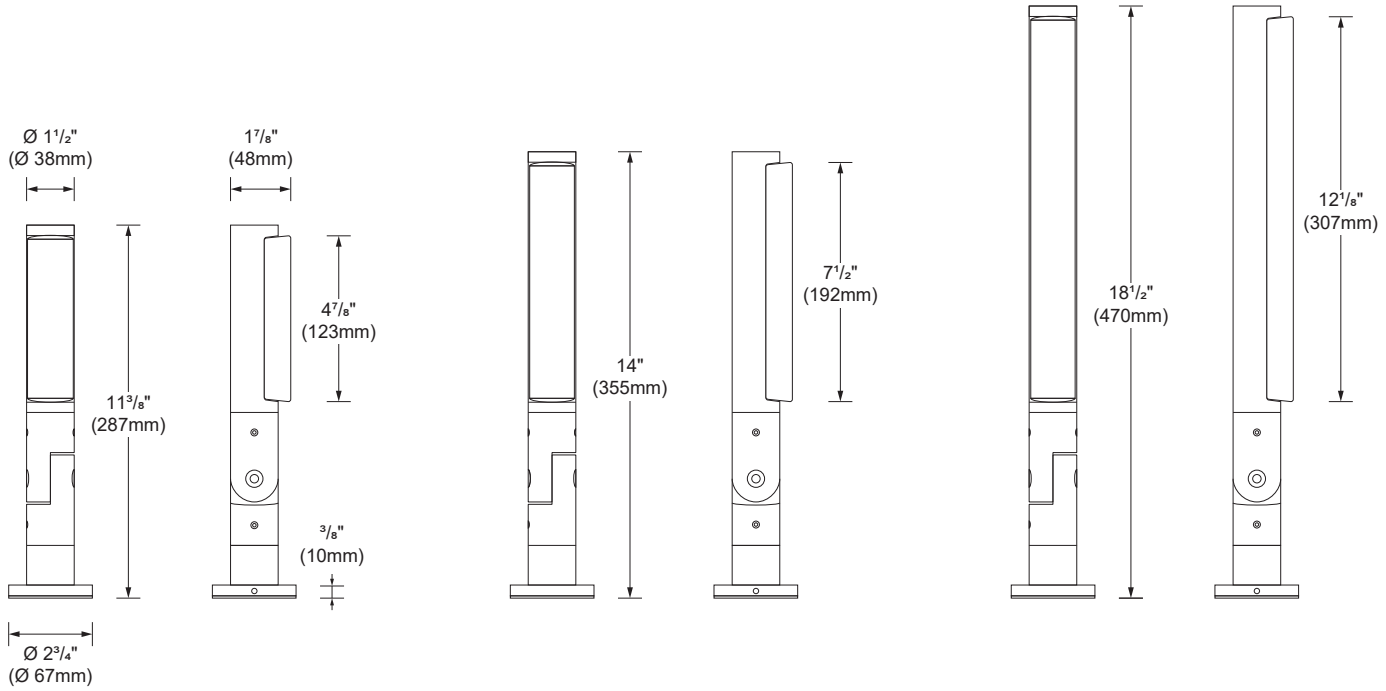

FRONT VIEW **SIDE VIEW** **FRONT VIEW** **SIDE VIEW** **FRONT VIEW** **SIDE VIEW**

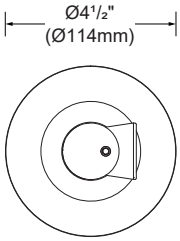

TOP VIEW

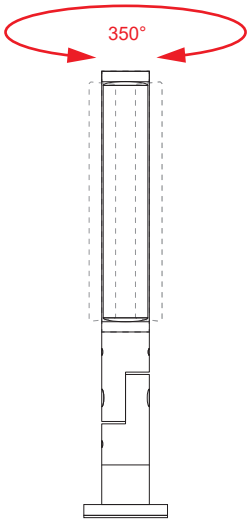

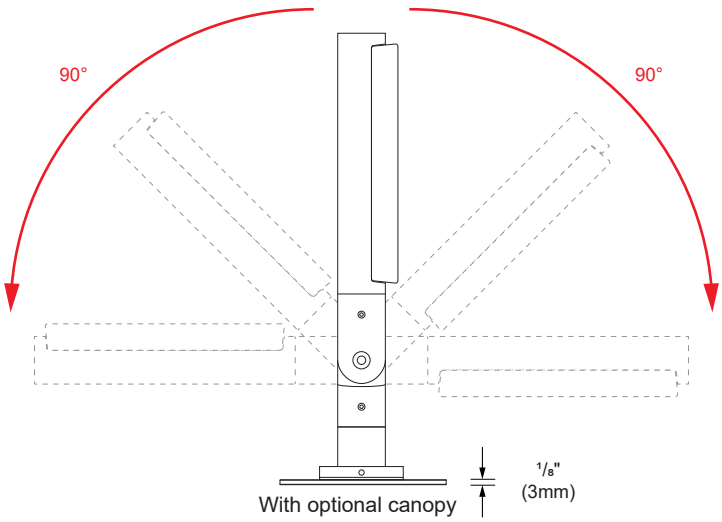

With optional canopy

MOUNTING OPTIONS

SURFACE

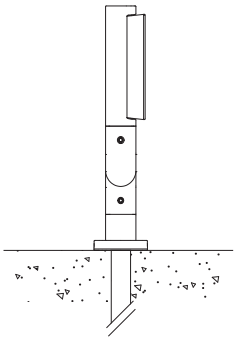

FW-REM - Fixture whip to remote power supply. Installed directly to surface with recessed pipe, exposed cable or electrical conduit.

POLE

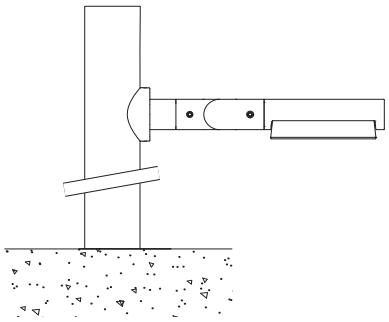

FW-REM - Mounting on pole with a die-cast aluminium flange suitable only for 2 3/8" (60mm)/ 3" (76mm) poles.

SOIL

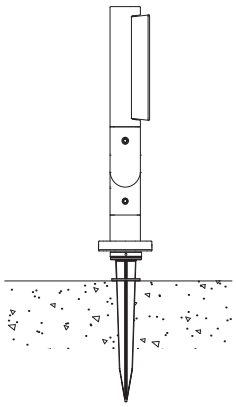

FW-REM - Mounting on stake. 2" of the upper part stay out of the ground.

SURFACE ON JUNCTION BOX

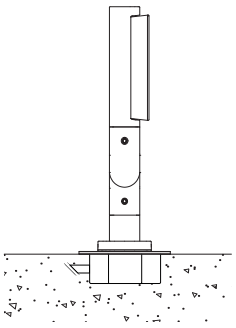

JB-REM - 4" junction box with remote power supply. Mounting adapter plate for standard octagonal junction box installation.

PHOTOMETRIC DATA

SMALL

CCT (K)	CRI	LOAD* (W)	OPTIC	LUMENS (lm)	EFFICACY (lm / W)	MAX CANDELA (cd)	MODELS
3000K	90	14W	Spot 10°	573	41	10 261	S1751W-SP
			Flood 32°	470	34	1 453	S1751W-FL
			Wide flood 60°	363	26	495	S1751W-WF
			Elliptical 60° x 10°	430	31	2 379	S1751W-ELL

Spot 10° (3000K, 90CRI)

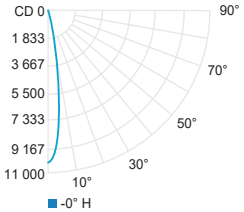

	Center beam fc	Beam width ft
2ft	2 562	0.4
4ft	640	0.9
6ft	285	1.3
8ft	160	1.7
10ft	102	2.1
12ft	71.2	2.6

Flood 32° (3000K, 90CRI)

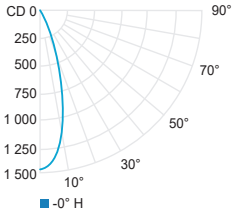

	Center beam fc	Beam width ft
2ft	363	0.4
4ft	90.8	0.9
6ft	40.4	1.3
8ft	22.7	1.7
10ft	14.5	2.1
12ft	10.1	2.6

Wide flood 60° (3000K, 90CRI)

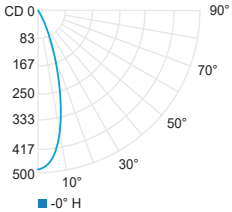

	Center beam fc	Beam width ft
2ft	124	2.0
4ft	31	4.1
6ft	13.8	6.1
8ft	7.74	8.1
10ft	4.96	10.1
12ft	3.44	12.2

Elliptical 60° x 10° (3000K, 90CRI)

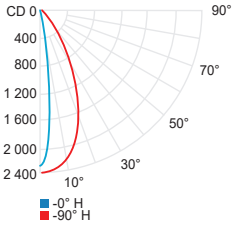

	Center beam fc	Beam width ft
2ft	363	1.2
4ft	90.8	2.3
6ft	40.4	3.5
8ft	22.7	4.7
10ft	14.5	5.8
12ft	10.1	7.0

MEDIUM

CCT (K)	CRI	LOAD* (W)	OPTIC	LUMENS (lm)	EFFICACY (lm / W)	MAX CANDELA (cd)	MODELS
3000K	90	24.5W	Spot 10°	940	38	17 094	S1761W-SP
			Flood 32°	799	33	2 608	S1761W-FL
			Wide flood 60°	596	24	820	S1761W-WF
			Elliptical 60° x 10°	692	28	3 997	S1761W-ELL

Spot 10° (3000K, 90CRI)

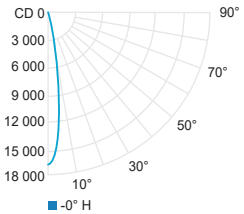

	Center beam fc	Beam width ft
2ft	4 267	0.4
4ft	1 067	0.8
6ft	474	1.3
8ft	267	1.7
10ft	171	2.1
12ft	119	2.5

Flood 32° (3000K, 90CRI)

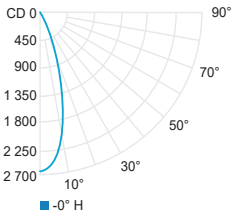

	Center beam fc	Beam width ft
2ft	652	1.1
4ft	163	2.3
6ft	72.5	3.4
8ft	40.8	4.5
10ft	26.1	5.7
12ft	18.1	6.8

Wide flood 60° (3000K, 90CRI)

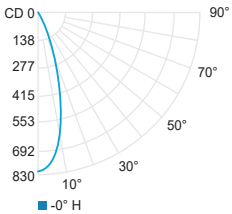

	Center beam fc	Beam width ft
2ft	205	2.0
4ft	51.3	4.0
6ft	22.8	6.0
8ft	12.8	8.0
10ft	8.20	10.0
12ft	5.69	12.1

Elliptical 60° x 10° (3000K, 90CRI)

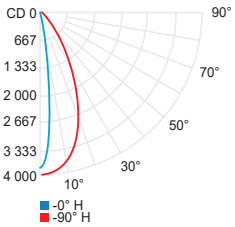

	Center beam fc	Beam width ft
2ft	991	0.3
4ft	248	0.7
6ft	110	1.0
8ft	62.0	1.3
10ft	39.7	1.7
12ft	27.5	2.0

CCT options	2700K	3000K	4000K
CRI options	90CRI	90CRI	80CRI
Multiplier	**0.94**	**1**	**1.05**

*For products that use a remote LED driver, total system wattage will vary according to the efficacy of the remote LED driver selected.
Use multiplier table for other CCT and CRI output data. Efficacy based on IESNA LM-79 test reports.

PHOTOMETRIC DATA

LARGE

CCT (K)	CRI	LOAD* (W)	OPTIC	LUMENS (lm)	EFFICACY (lm / W)	MAX CANDELA (cd)	MODELS
3000K	90	34W	Spot 10°	1 705	51	42 206	S1771W-SP
			Flood 32°	1 418	42	4 730	S1771W-FL
			Wide flood 60°	1 023	30	1 450	S1771W-WF
			Elliptical 60° x 10°	1 218	36	7 633	S1771W-ELL

Spot 10° (3000K, 90CRI)

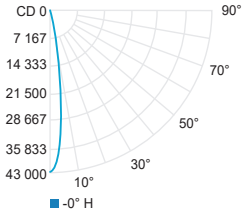

	Center beam fc	Beam width ft
2ft	10 531	0.4
4ft	2 633	0.7
6ft	1 170	1.1
8ft	658	1.4
10ft	421	1.8
12ft	293	2.2

Flood 32° (3000K, 90CRI)

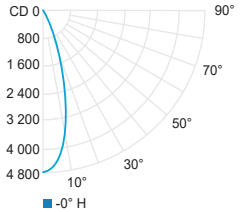

	Center beam fc	Beam width ft
2ft	1 183	1.1
4ft	296	2.2
6ft	131	3.4
8ft	73.9	4.5
10ft	47.3	5.6
12ft	32.9	6.7

Wide flood 60° (3000K, 90CRI)

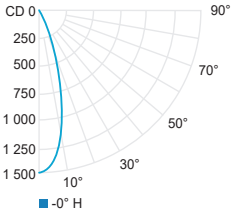

	Center beam fc	Beam width ft
2ft	363	2.0
4ft	90.7	4.0
6ft	40.3	5.9
8ft	22.7	7.9
10ft	14.5	9.9
12ft	10.1	11.9

Elliptical 60° x 10° (3000K, 90CRI)

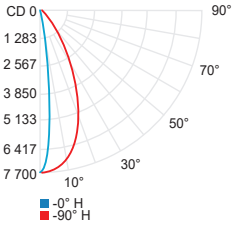

	Center beam fc	Beam width ft
2ft	1 898	0.3
4ft	475	0.6
6ft	211	0.9
8ft	119	1.3
10ft	75.9	1.6
12ft	52.7	1.9

CCT options	2700K	3000K	4000K
CRI options	90CRI	90CRI	80CRI
Multiplier	**0.94**	**1**	**1.05**

*For products that use a remote LED driver, total system wattage will vary according to the efficacy of the remote LED driver selected.
Use multiplier table for other CCT and CRI output data. Efficacy based on IESNA LM-79 test reports.